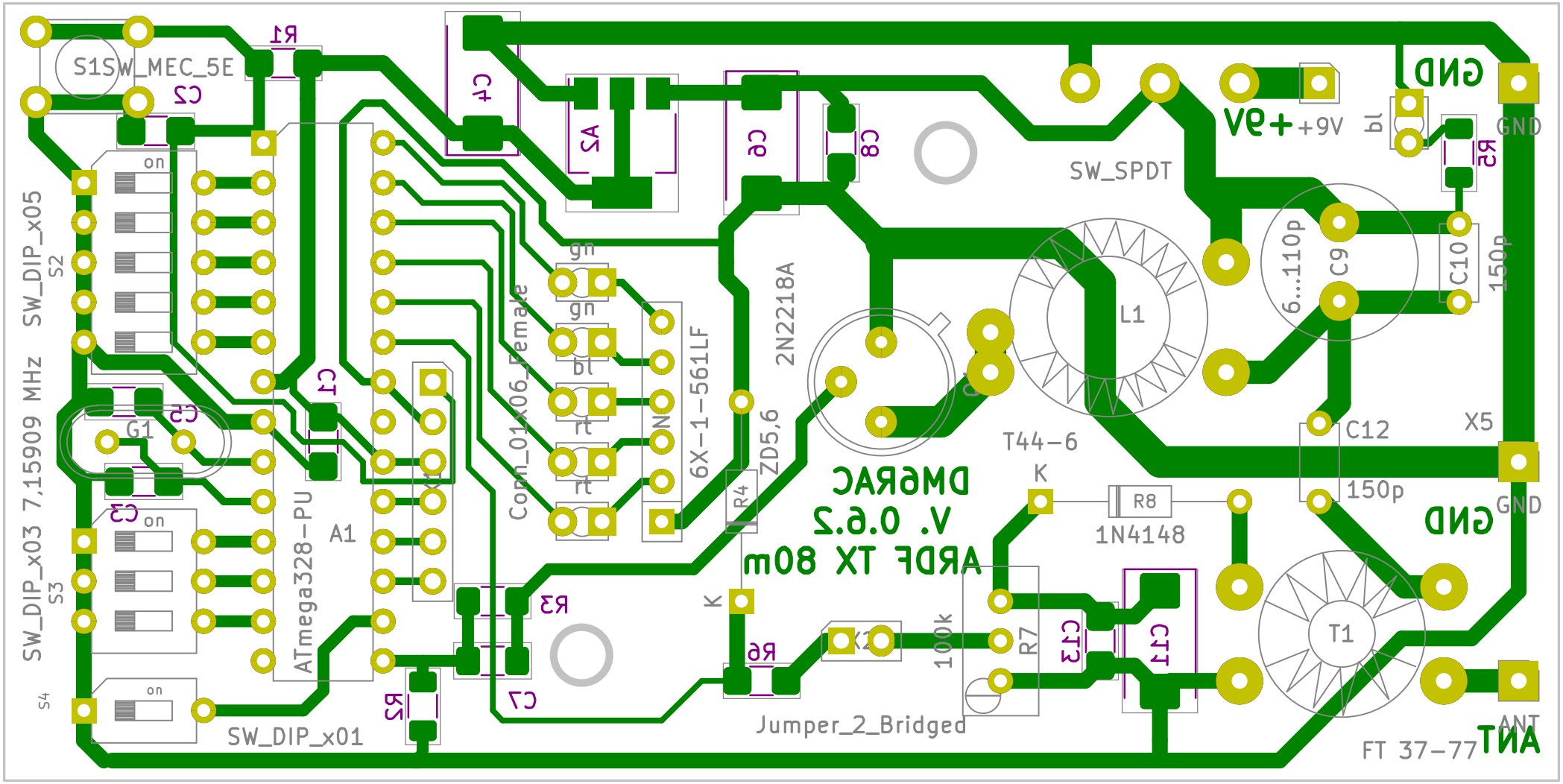
S1SW_MEC_5E
R1
C2
C1
A2
C6
C8
SW_SPDT
+9V
GND
L1
6...110p
C9
C10
150p
R5
X5
C12
150p
T44-6
K
R8
1N4148
T1
C11
C13
R7
100k
K2
R6
K
R4
ZD5,6
2N2218A
6X-1-561LF
Conn_01x06_Female
gn
gn
bl
rt
rt
C7
R3
C4
A1
ATmega328-PU
R2
C3
C5
G1
SW_DIP_x05
S2
SW_DIP_x03
S3
S4
SW_DIP_x01
on
on
on
Jumper_2_Bridged
FT 37-77
ANT
ARDF TX 80m
V. 0.6.2
DMGRAC